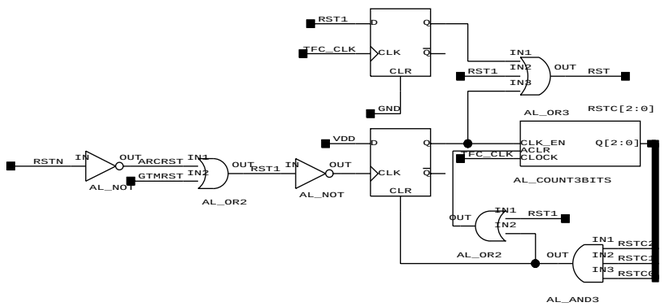

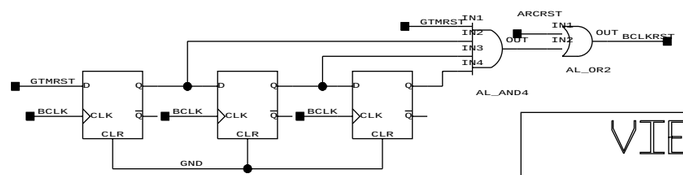

VIEWlogic

DRAWN BY: